RADIO: LIST AND LOCATION OF COMPONENTS

Note, one or more warnings are present in this procedure

Equipment required
Diagnostic tool

1. LIST OF COMPONENTS

1- THE RADIO SYSTEM COMPRISES:

- a radio aerial
- front speakers
- rear speakers
- tweeters in the dashboardDashboard assembly: Exploded view
- a radio control satellite
- a radio
- an offset multimedia socket
- an "hands-free" microphone

mcx30.com

2. LOCATION OF COMPONENTS

CAUTION

To prevent damaging the navigation system, wait 1 minuteafter switching off the + after ignition feed.

CAUTION

To ensure correct operation:

- do not pinch the aerial cable,
- do not bend the aerial cable,
- do not force the aerial cable when refitting.

1- AERIAL

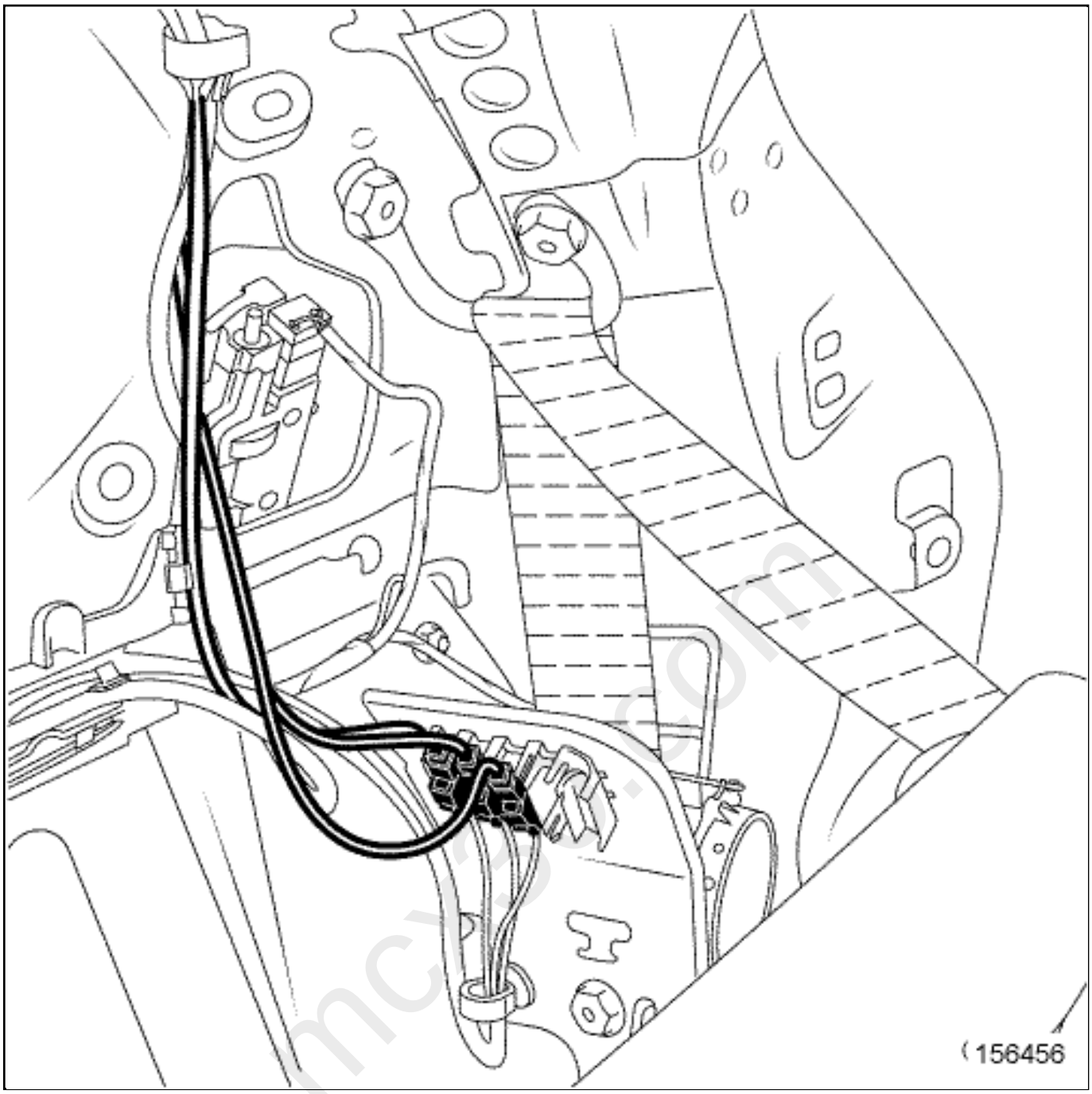
156456

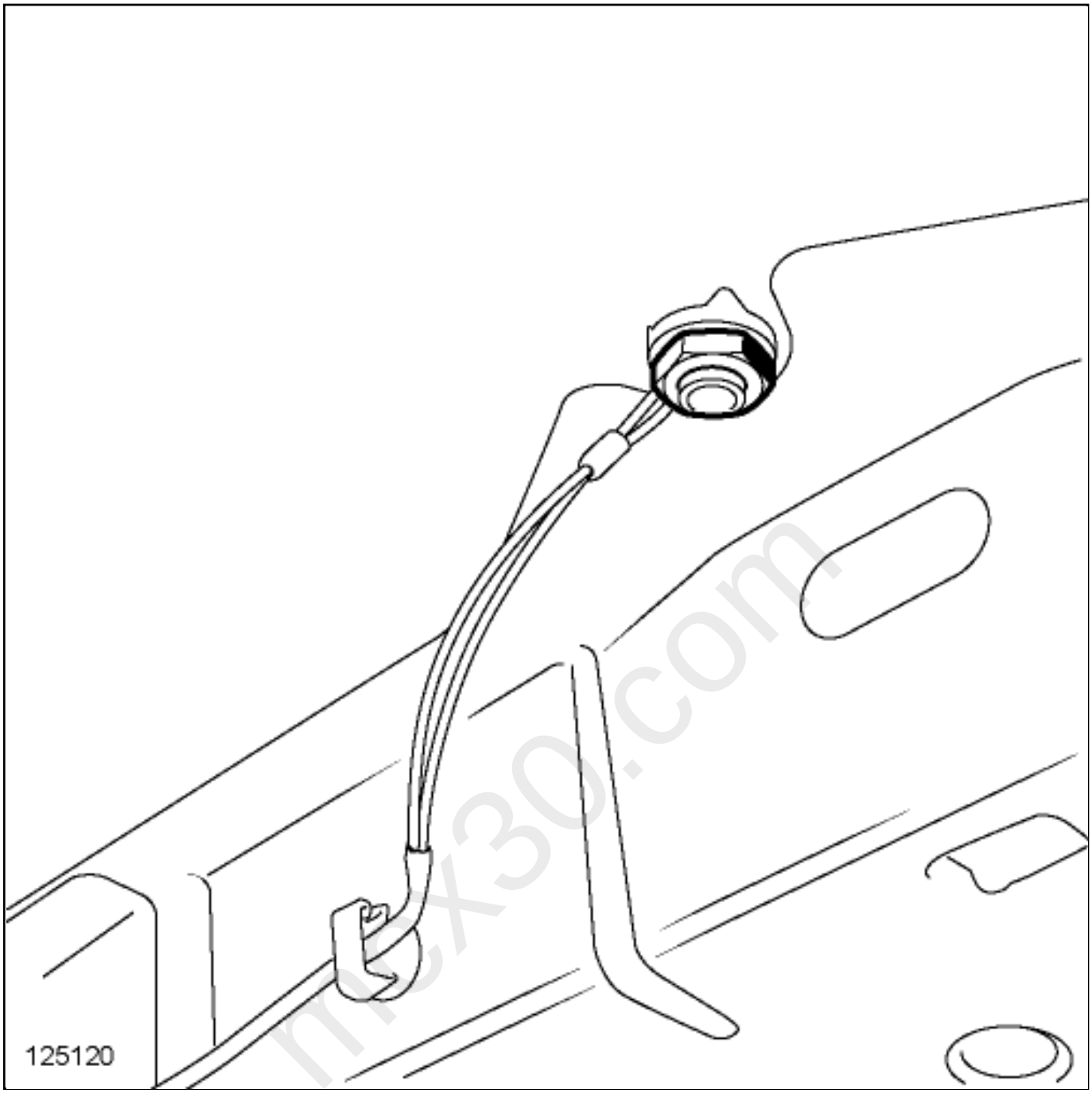

mex30.com

2- RADIO CONTROL SATELLITE

1- RADIO

mcx30.com

mcx30.com

2- "HANDS- FREE" MICROPHONE

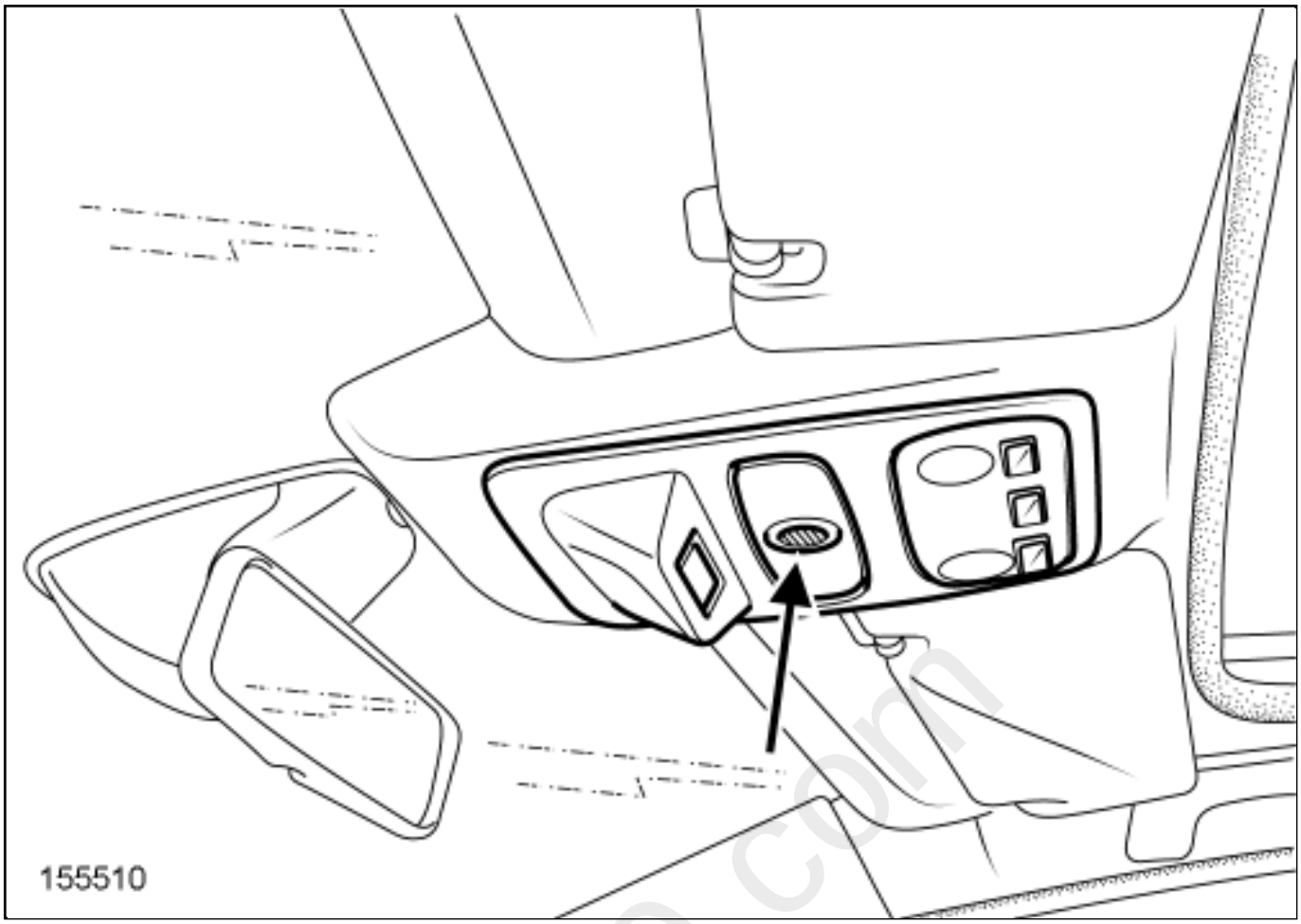

Apply the before / after repair procedure using the Diagnostic tool**Diagnostic tool : Use** :

-Computer concerned by the Before / After repair procedure:

"Car phone computer" .

Repair-30x04x06x14-02x51-1-26-1.xml

XSL version : 3.02 du 22/07/11

mcx30.com